Beam Flange Connector

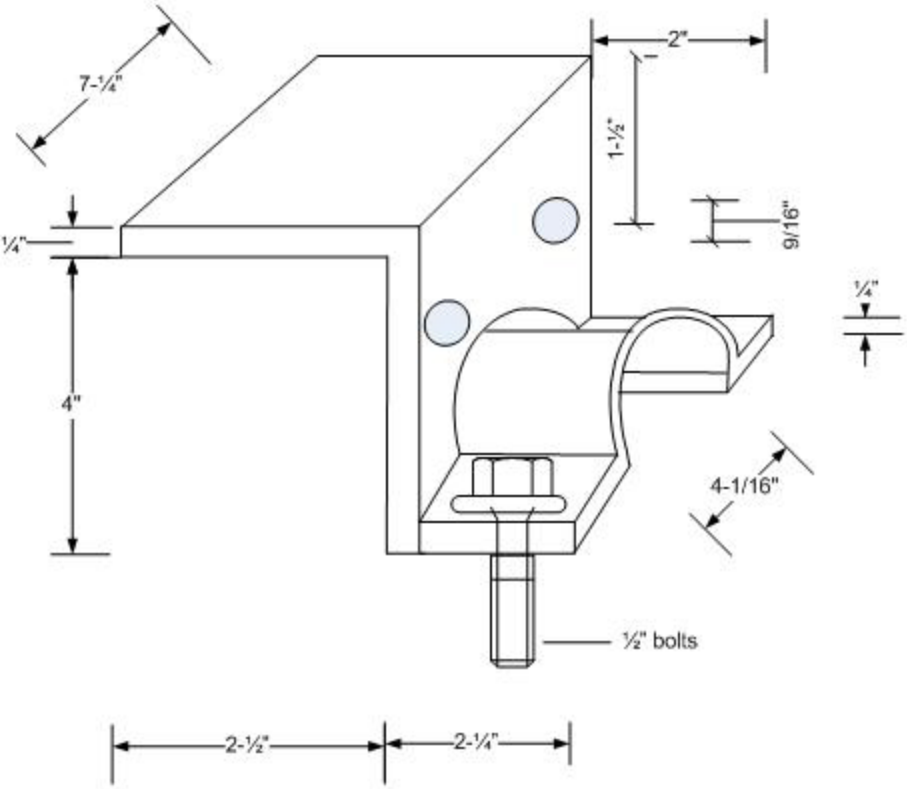

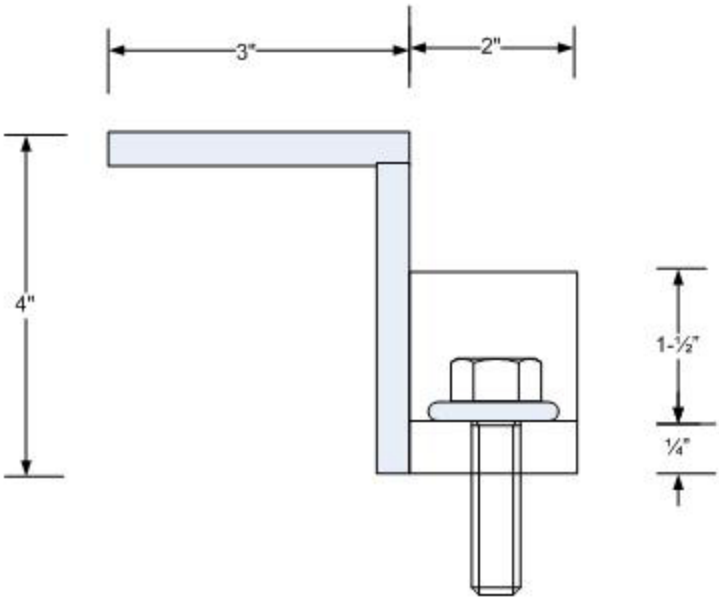

TrueBounce 194 Riverside Ave New Bedford, MA 508-999-3020 508-990-3726 fax	TITLE Beam Flange Connector		
	DATE 1/26/2008	DRAWN BY OWNER	
	SCALE N/A	REVISED 1/26/2008	PAGE 1 OF 1